Standard Accessible Parking Spaces

Mitigation Statement:

Re-grade accessible parking spaces.
Restripe accessible parking spaces.
Add wheel stops

Guidelines:

1. Wheel Stop or curb
   - Prevents vehicles from going on the pedestrian path (sidewalk).
2. Accessible Space and Aisle
   - Space must be 8 ft. wide min, measured from the centerline of the striping.
   - Aisle must be 5 ft. wide min, measured from the centerline of the striping.
   - Must be next to an accessible route.
   - May share an access aisle with another accessible space.
3. Slope
   - Parking space and access aisles must be level in all directions.
4. Parking Signage
   - Placed at the head of each space no more than a maximum 10 ft. away.

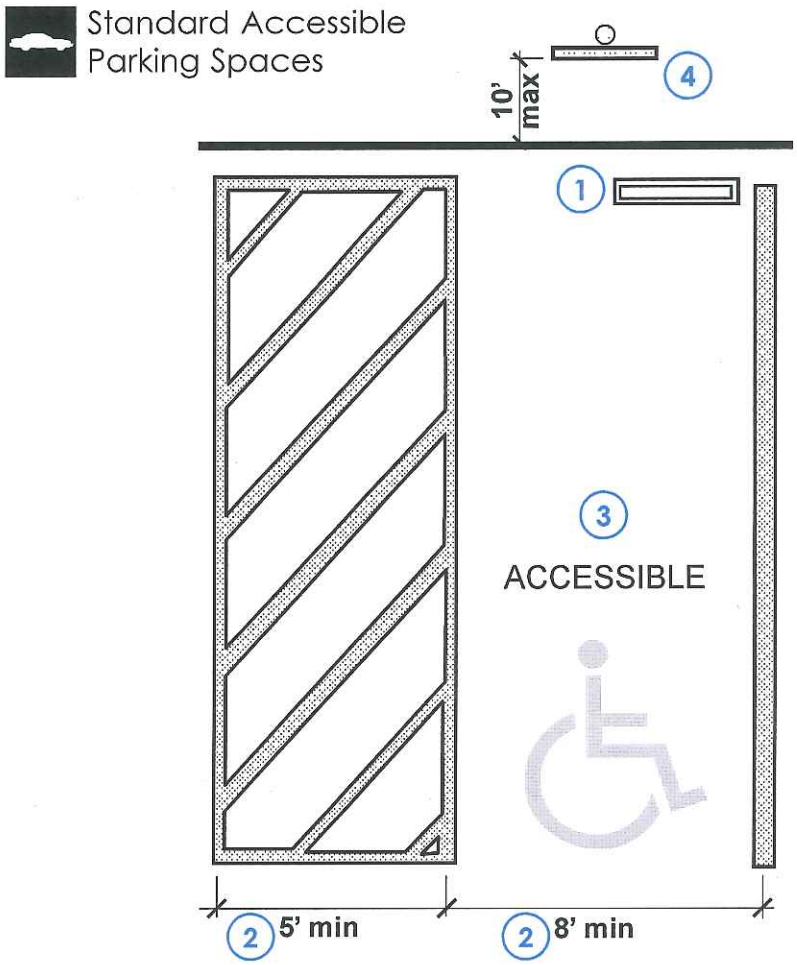

ADA Standards 502

THE LOTTERY

Van Accessible Parking Spaces

Mitigation Statement:

Re-grade accessible parking spaces.
Restripe accessible parking spaces.
Add wheel stops

Guidelines:

1. Wheel Stop or curb
   - Prevents vehicles from going on the pedestrian path (sidewalk).
2. Van Accessible Space and Aisle
   - Space must be 8 ft. wide min, measured from the centerline of the striping.
   - Aisle must be 8ft. wide min, measured from the centerline of the striping.
   - Must be next to an accessible route.
   - May share an access aisle with another accessible space.
3. Slope
   - Parking space and access aisles must be level in all directions.
4. Headroom
   - 98 in. min headroom to, from and at each van accessible space and access aisle.
5. Parking Signage
   - Placed at the head of each space no more than a maximum 10 ft. away.

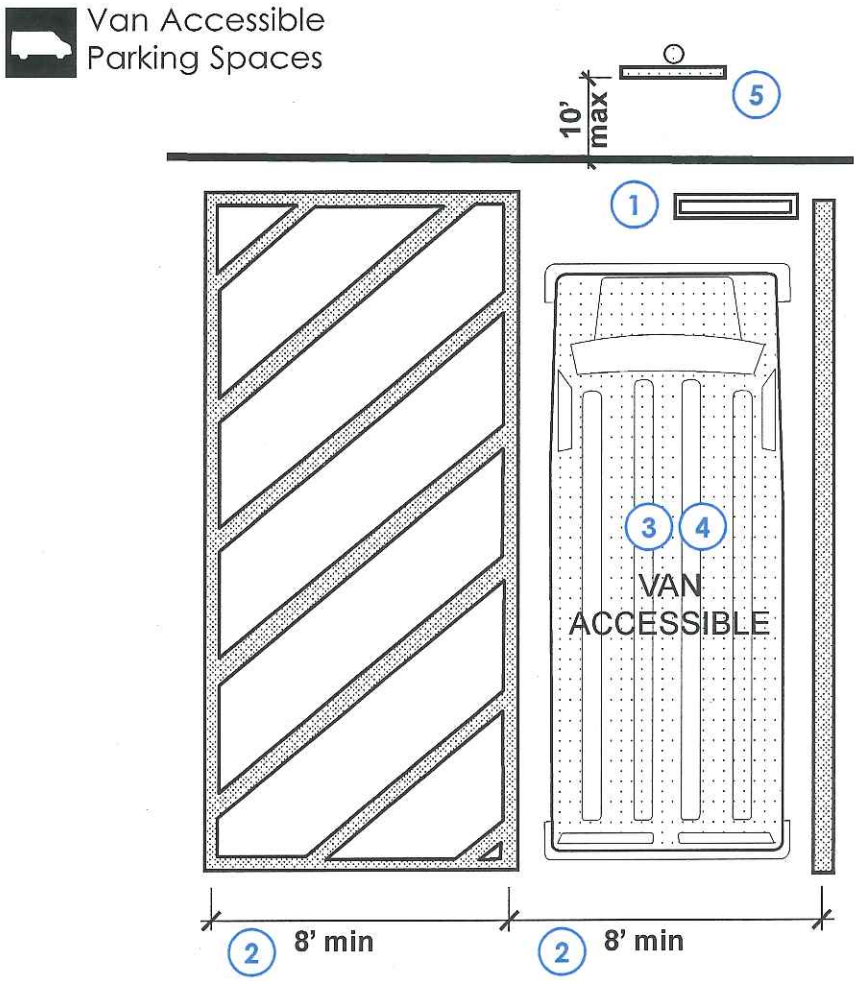

ADA Standards 502

THE LOTTERY

Signage at Accessible Parking Spaces

Mitigation Statement:

Provide accessibility signage on a post.

Guidelines:

1. International Symbol of Accessibility
   - Located on parking sign.
2. Mounting Height
   - Sign mounted 96" maximum from the top of the sign to ground.
   - Sign mounted 60" minimum from the bottom of the sign to the ground.
   - Max 10 ft. away from the head of the space.
3. "Van Accessible"
   - Below International Symbol of Accessibility or on Additional Sign Below Existing Sign.
   - For Van Accessible Spaces Only.

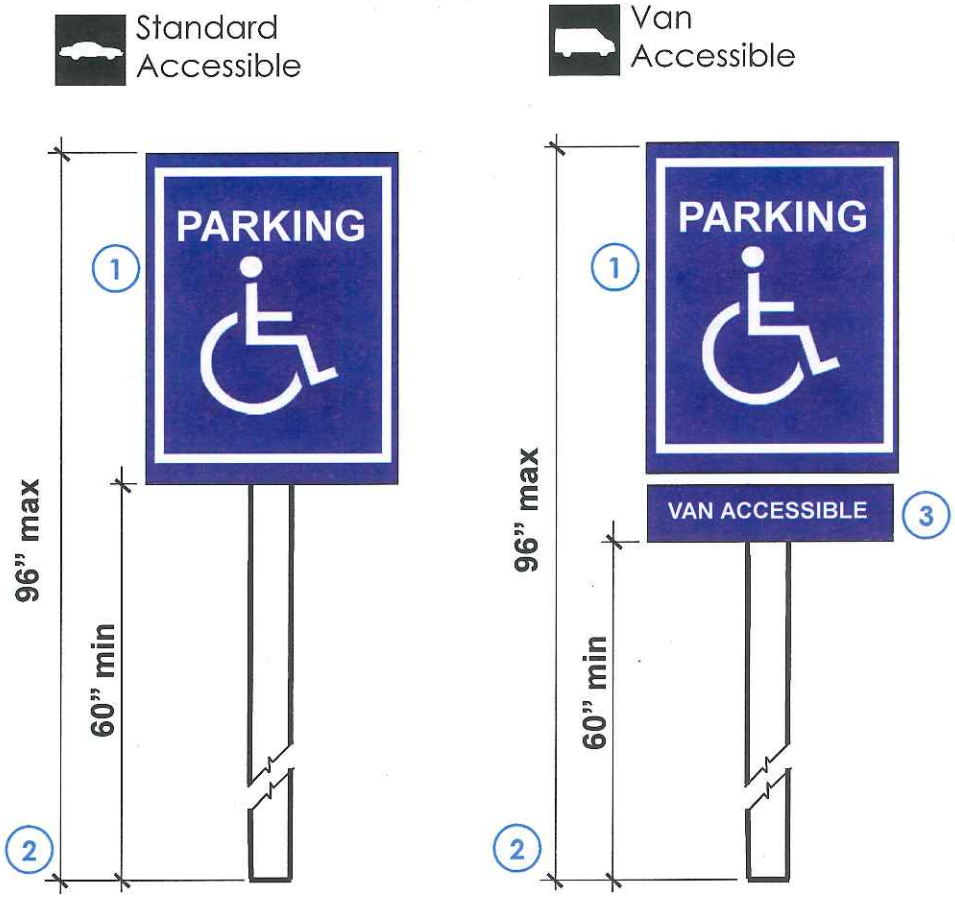

ADA Standards 902

THE LOTTERY

Accessible Parking Spaces

Mitigation Statement:

Add new accessible parking spaces and signs
Provide van accessible parking space

ADA Standards 208

1

1

Total Number of Parking Spaces in Lot or Garage	Standard Accessible	Van Accessible
1-25	0	1
25-50	1	1
51-75	2	1
76-100	3	1
101-150	4	1
151-200	5	1
201-300	6	1
301-400	7	1
401-500	8	2

THE LOTTERY

Accessible Tables and Seating

Mitigation Statement:

Provide an accessible table

Guidelines:

Clear Floor Space

1. At least 30" wide x 48" deep
   - Clear floor space may extend up to 19" under the table.
2. At least 27" from the floor to the underside of the table.
   - No pedestal bases.

Table Height

3. Height of table surface must be 28" - 34" high.

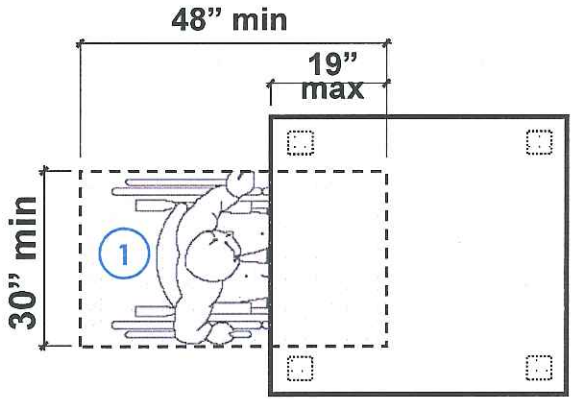

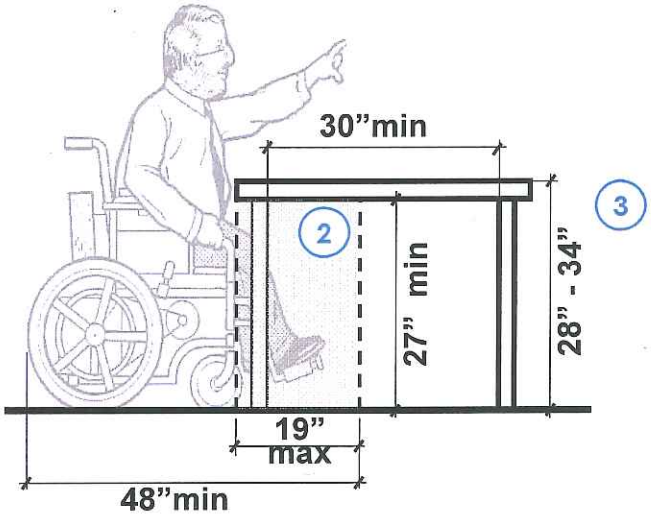

ADA Standards 902

THE LOTTERY

Accessible Counters

Mitigation Statement:

Install a compliant counter.

Guidelines:

1. Clear Floor Space
   - Clear space in front of counter must be at least 30" wide x 48" long.
   - Keep space clear of any obstructions (no boxes, coolers, sales racks, etc.)
2. Width
   - Cashier counter must provide a lowered section that is at least 36" wide.
3. Height
   - Lowered portion of counter must be no more than 36" high.

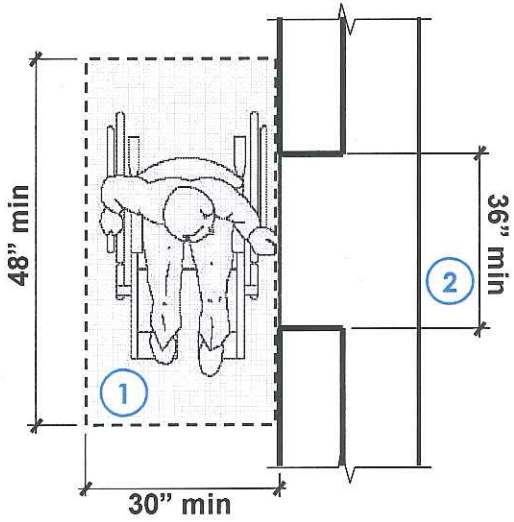

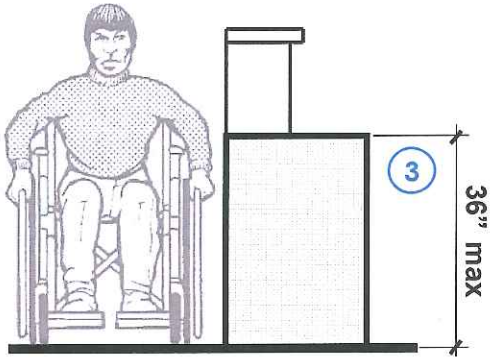

ADA Standards 904

THE LOTTERY

Curb Ramps

Mitigation Statement:

Rebuild/ Re-grade/ Install curb cut.

Guidelines:

1. Location and Slope
   - No more than 8.3% slope.
   - No more than 2% cross-slope.
   - At least 36" wide.
2. Flared Sides
   - No more than 10% slope on both sides.
3. Top & Bottom Landing
   - Level landing at the top, at least 48" deep
4. Make a smooth transition from the curb ramp to the walkways (top and bottom).

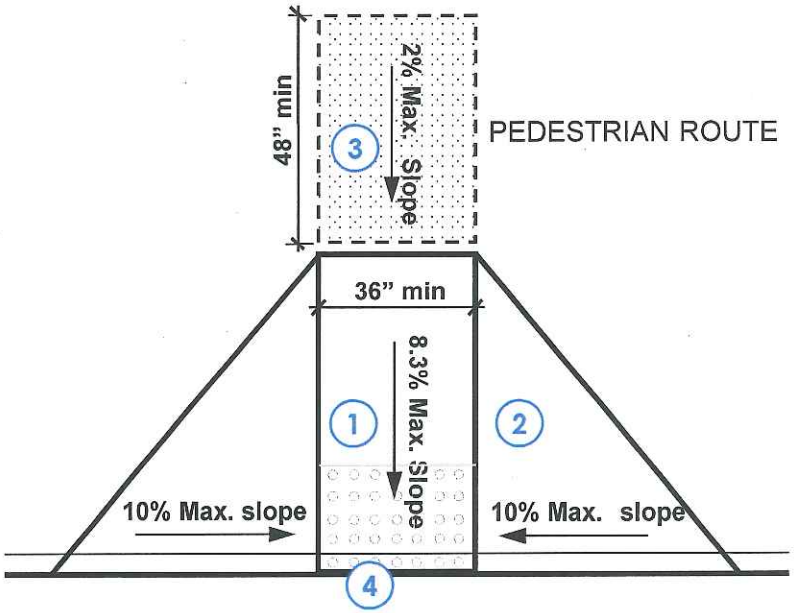

ADA Standards 406

THE LOTTERY

In-Line Curb Ramps

Mitigation Statement:

Rebuild/ Re-grade/ Install curb cut

Guidelines:

Curb Ramp

1
- No more than 8.3% slope.
- No more than 2% cross-slope.
- At least 36" wide.

Top & Bottom Landing

2
- Level landing at the top, at least 48" deep

3
- Make a smooth transition from the curb ramp to the walkways (top and bottom).

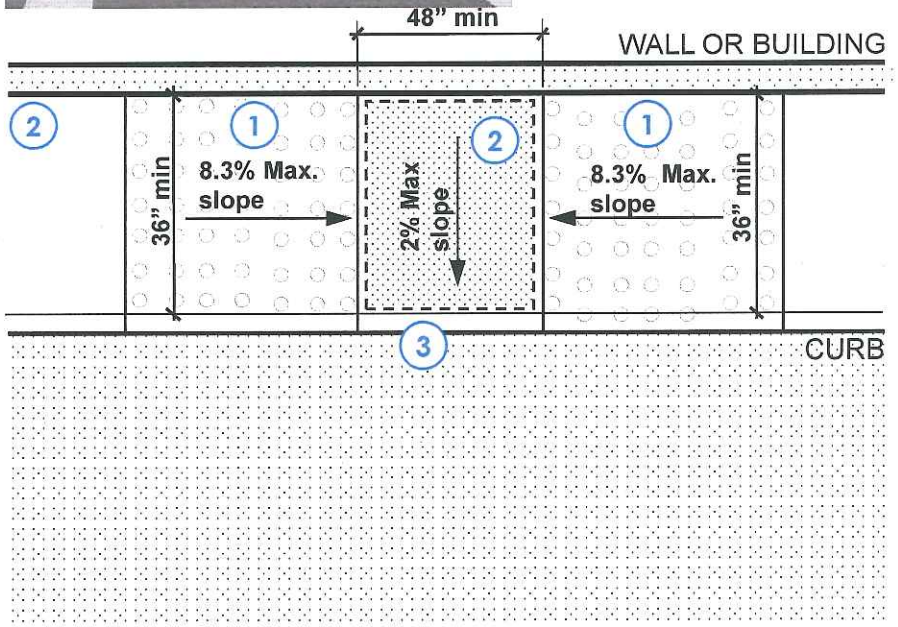

ADA Standards 406

THE LOTTERY

Buzzers

Mitigation Statement:

Install a buzzer at entrance.

Guidelines:

1. Location
   - Buzzers must be mounted near the accessible entrance, out of the swing of the door.
2. Buzzer must have a 30"x48" level clear floor space, free of obstructions.
3. Height
   - Locate buzzers 15"- 48" high.
4. Signage
   - Include a sign that says: "Press buzzer for assistance".

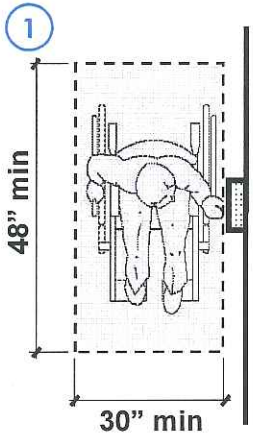

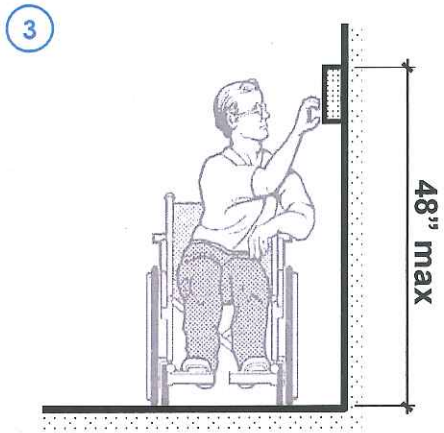

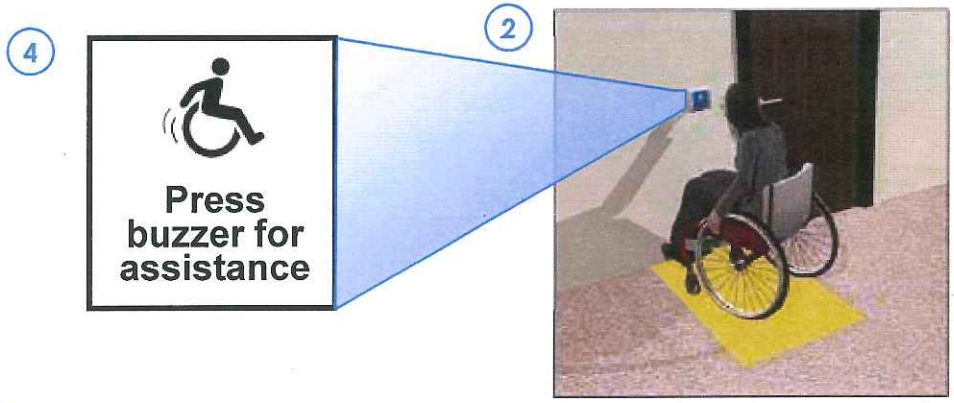

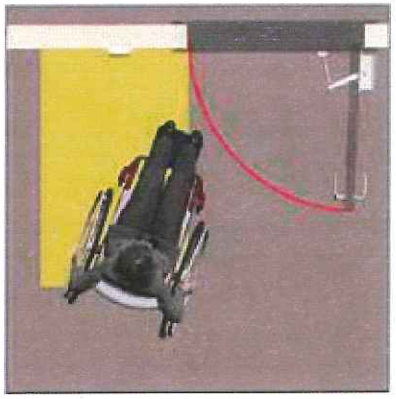

ADA Standards 308

THE LOTTERY

Ramps

Mitigation Statement:

Install an accessible ramp.
Widen existing ramp.
Enlarge ramp landing.

Guidelines:

1. Slope and Handrails
   - Slope should be no more than 8.3%
   - Provide two handrails on both sides of the ramp
2. Width of Ramp
   - Ramp should have at least 48" between handrails
3. Height of Ramp
   - Ramp should not go up more than 30".
   - Ramps higher than 30" must have a landing at every 30" of rise.
4. Length of Ramp
   - For every 1" rise ramp should be 1' long
   - Ramp must be no more than 30' long
   - Ramps more than 30' long must have a landing every 30'
5. Top and Bottom Landing
   - Landings must be at least 60" wide x 60" long.
   - Landings must be level and be clear of obstructions.

ADA Standards 405

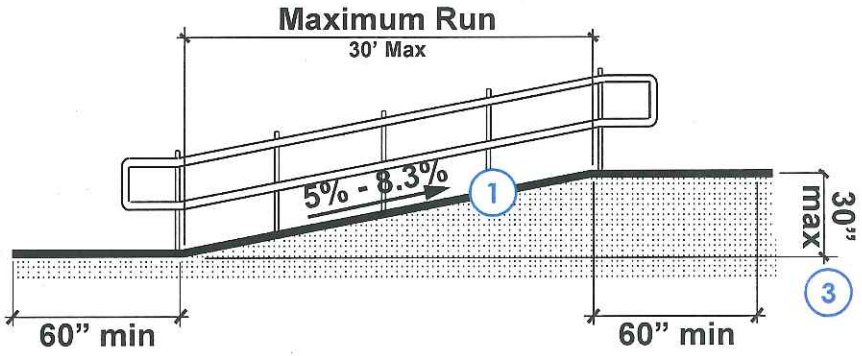

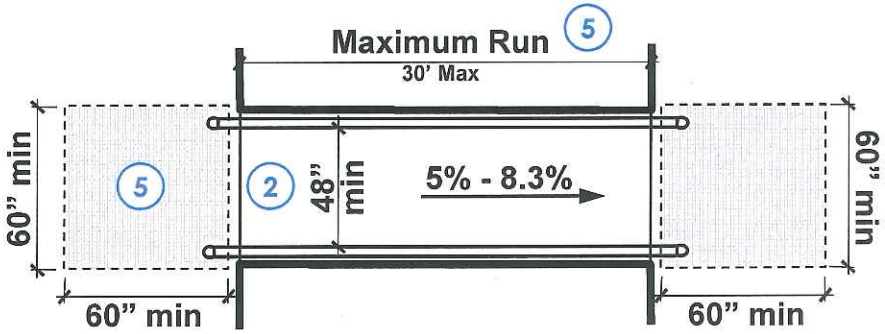

Ramp Handrails

Mitigation Statement:

Install free-standing handrails at ramp.
Add pipe railing to existing wall.
Add extensions to existing handrails.

Guidelines:

1 Handrail Height

- All ramps must have two handrails on each side.
- Top handrails must be mounted between 34" and 38" above the floor.
- Bottom handrail must be mounted between 18" and 20" above the floor

2 Extensions

- The top and bottom of the handrail must extend at least12" beyond the end of the ramp.

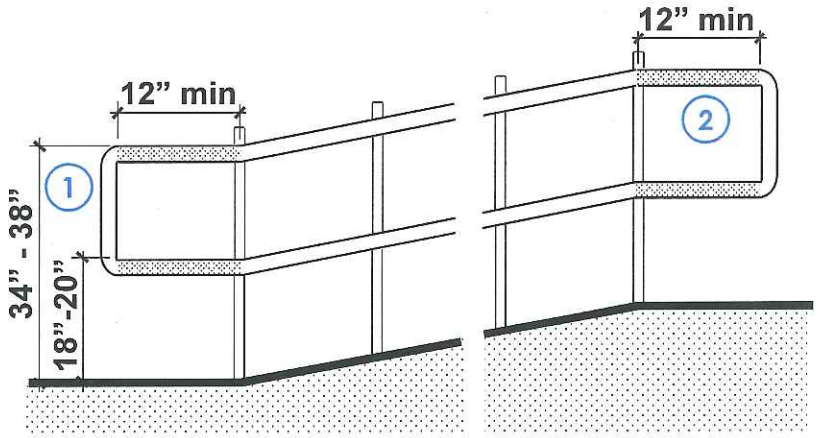

3 Handrail Gripping Surface

- Handrails must be round.
- Diameter of handrail must be between 1 ¼ " - 2".
- The distance between the handrail and the wall should be 1 ½".

3 POST-MOUNTED

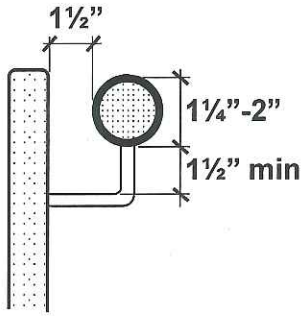

3 WALL-MOUNTED

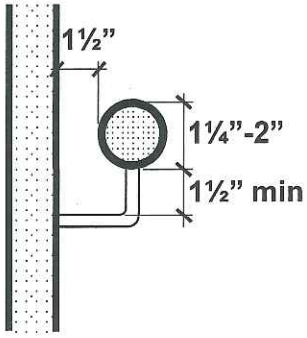

ADA Standards 505

THE LOTTERY

Exterior Door Clearance

Mitigation Statement:

Widen door opening
Modify/ relocated door
Adjust or remove door closer
Provide a level concrete landing

Guidelines:

1 Door Clearances

- Minimum 60" deep maneuvering space perpendicular to door.
- Minimum 18" beyond the latch side of the door in addition to the clear width of the door.
- Clear width of door is 32" minimum, measured to the face of the door to the while the door is 90˚ open.

2 Door Maneuvering Space

- Clear maneuvering space at door must have a 2% maximum slope and cross-slope.
- Clear maneuvering space must be free of obstructions.
- Force to open exterior doors is 15 lbf maximum.

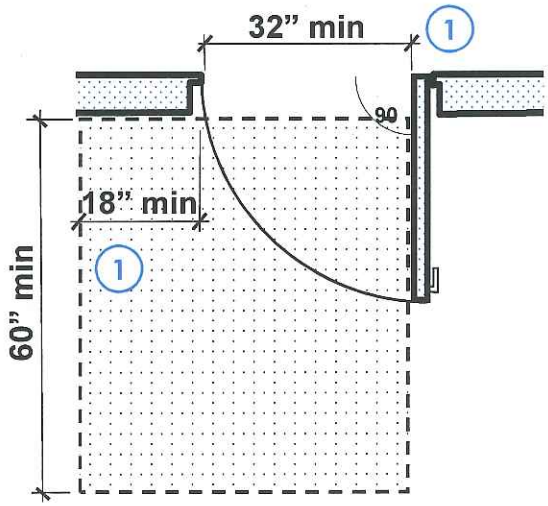

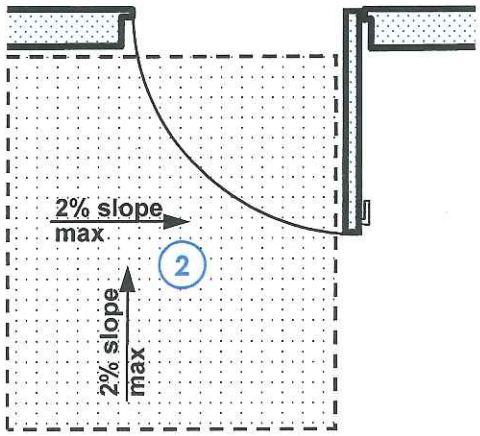

ADA Standards 404

THE LOTTERY

Exterior Door Hardware and Thresholds

Mitigation Statement:

Replace Door Hardware
Replace/ Remove Door Threshold

Guidelines:

1 Door Hardware

- Door hardware must be installed between 36" - 48" above the floor
- Door hardware must be a lever, U-dandle, or push bar (no door knobs).

2 Beveled Thresholds

- Threshold must be beveled to provide a smooth transition
- Threshold must be less than 1/2" high

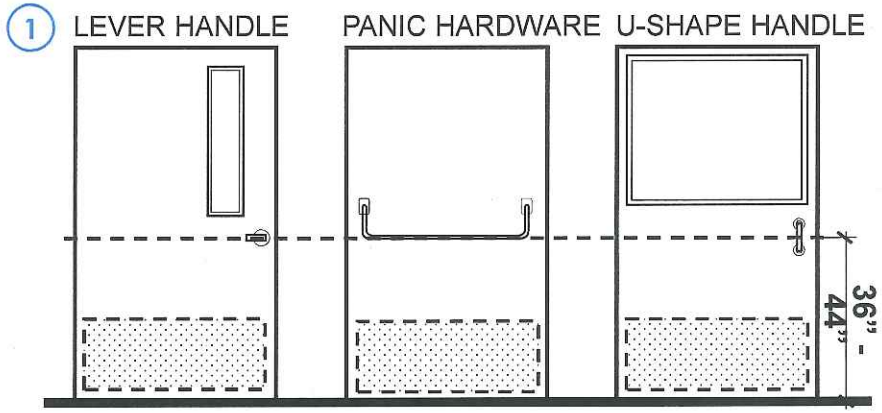

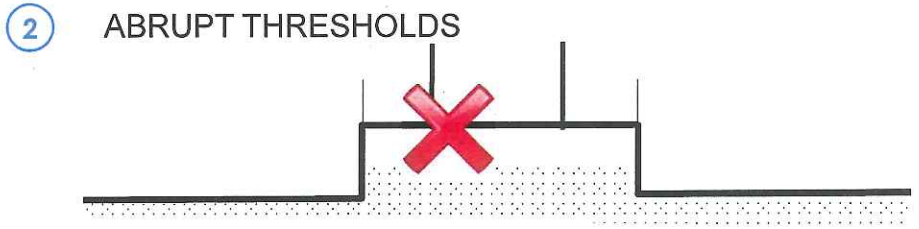

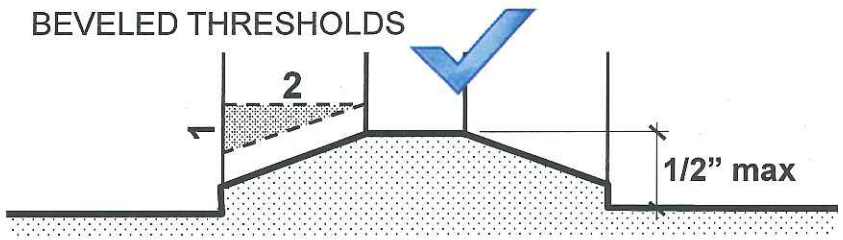

ADA Standards 404

THE LOTTERY

Walks and Sidewalks

Mitigation Statement:

Widen existing walkway
Modify/ relocated door
Adjust or remove door closer
Provide a level concrete landing

Guidelines:

1 Walkway Width

- Minimum 48" measured to the inside of the curb stone.
- Clear width may be reduced to 36" minimum for short distances.

2 Walkway Slope

- Slope of walkway must be no more than 5%.
- Cross-slope must be no more than 2%.

3 Walkway Surface

- Walkway must be stable, firm and slip resistant (no loose pebbles or icy patches)
- Surface of walkway must not have any cracks, gaps or bumps >1/2."
- Water must not be able to accumulate on surface of walkway.

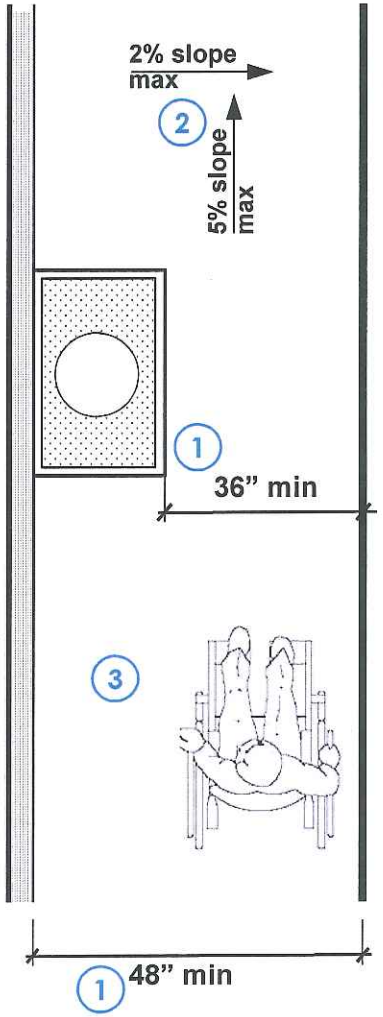

ADA Standards 403

THE LOTTERY

Vending Machines

Mitigation Statement:

Relocate Vending Machine

Guidelines:

1. Location
   - Vending Machine must be located on an accessible route.
   - Accessible route must be 36" wide minimum and not have any changes in level >1/2"
2. Clear Floor Space
   - Vending machine must have a 30"x48" clear floor space in front of machine.
   - Clear floor space must be level and free of any obstructions.

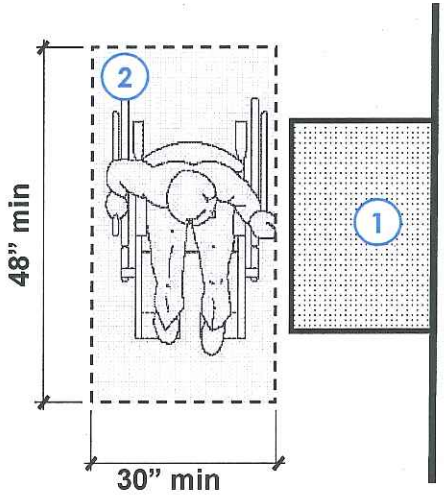

ADA Standards 205

THE LOTTERY